Circuit board diagram June 2000 Universal Fatch Alarm
Ver 1.0

CIRCUIT: DOWSIRI_GOPRO_MUL 9MUL SOOO MUVAVA.SEP FSIZU WISMW 10:4

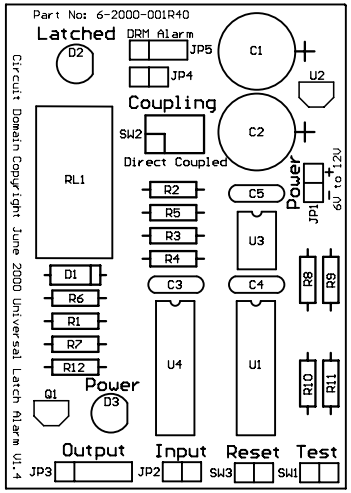
Part No: 6-2000-001R40
Latched
DRM Alarm
JP5
JP4
D2
C1
U2
Coupling
SW2
Direct Coupled
C2
RL1
Power
JP1
6V to 12V
R2
R5
R3
R4
C5
U3
D1
R6
R1
R7
R12
C3
C4
R8
R9
U4
U1
R10
R11
Q1
Power
D3
Output
Input
Reset
Test
JP3
JP2
SW3
SW1
Circuit Domain Copyright June 2000 Universal Latch Alarm V1.4